DKG-21
PERSONAL GAMMA RADIATION DOSIMETER

Operating manual

BICT.412118.031-02 HE

CONTENTS

1 GENERAL GUIDELINES 3
2 MAIN INFORMATION ABOUT THE DOSIMETER 4
3 DESCRIPTION AND OPERATION 5
4 PROPER USE OF THE DOSIMETER 28
5 TECHNICAL MAINTENANCE 51
6 STORAGE 67
7 SHIPPING 67
8 DISPOSAL 69
9 WARRANTY 70
10 PACKING CERTIFICATE 72
11 CERTIFICATE OF ACCEPTANCE 73
12 PERFORMANCE RECORDS OF THE DEVICE 74

13 CLAIMS 75
14 ACCEPTANCE AND WARRANTY 76
APPENDIX A 77
APPENDIX B 79
APPENDIX C 82
APPENDIX D 83
APPENDIX E 84
APPENDIX F 85
APPENDIX G 86
APPENDIX H 90
APPENDIX J 92
LIST OF ABBREVIAITONS 93

This operating manual of BICT.412118.031-02 HE type contains all information necessary for studying, proper use of DKG-21 dosimeter of gamma radiation (hereinafter called the dosimeter) and full realization of its technical possibilities.

Before operating the dosimeter, the user should be instructed on safety regulations and radiation safety, and should study this operating manual.

1 GENERAL GUIDELINES

1.1 Carefully study the operating manual (hereinafter called the OM) before using the dosimeter.

1.2 The OM should always be kept with the dosimeter.

1.3 All records in the OM should be accurate and clear. Notes made in pencil, erasures and uncertified corrections are not allowed.

1.4 When the dosimeter is handed over to another company, summary records on operation shall be certified with a seal of the company, which hands over the dosimeter.

2 MAIN INFORMATION ABOUT THE DOSIMETER

The dosimeter meets the requirements of ТУ У 33.2-22362867-010:2007 technical specifications, and is registered in the State Register for Measuring Instruments, accepted for application in Ukraine. The State Register No. У2514-07.

The dosimeter is intended for use both independently and as a part of the automated system of personal dosimetry control (hereinafter ASPDC) included in the State Register for Measuring Instruments, accepted for application in Ukraine under No. У1816-07.

2.3 The dosimeter contains no precious materials.

Manufacturer:

Private Enterprise "SPPE "Sparing-Vist Center"
33 Volodymyra Velykoho Str., Lviv 79026, Ukraine.
tel.: (+38032) 242-15-15; fax: (+38032) 242-20-15.
E-mail: sales@ ecotest.ua.

3 DESCRIPTION AND OPERATION

3.1 Purpose of use

3.1.1 The dosimeter is designed to measure individual dose equivalent $H_p(10)$ of gamma and X-ray radiation (hereinafter – DE) and individual dose equivalent rate $\dot{H}_p(10)$ (hereinafter – DER) of gamma and X-ray radiation.

3.1.2 The dosimeter can be used at industrial enterprises and companies that deal with gamma and X-ray radiation sources.

3.2 Technical specifications

3.2.1 DER measurement range varies from 0.1 μSv/h to 1.0 Sv/h.

3.2.2 Main relative permissible error limit of DER measurement at 0.95 confidence probability is:

- 20 % - in the DER range of 1.0 μSv/h to 10 μSv/h (included);
- 15 % - in the DER range of 10 μSv/h to 1.0 Sv/h.

3.2.3 Measurement range of DE in the DER range of 0.1 μSv/h to 1.0 Sv/h varies from 0.001 mSv to 9999 mSv.

3.2.4 Main relative permissible error limit of DE measurement in the DER range of 1.0 μSv/h to 1.0 Sv/h in the DE range of 0.01 mSv to 9999 mSv at 0.95 confidence probability is 15 %.

3.2.5 Complementary relative permissible error limit of gamma radiation DER and DE measurement caused by ambient temperature change from - 20 ^{0}C to + 50 ^{0}C is 5 % per each 10 ^{0}C of deviation from + 20 ^{0}C.

3.2.6 Energy range of registered gamma radiation is from 0.05 MeV to 6.0 MeV.

3.2.7 Energy dependence of gamma radiation DER and DE measurement in the energy range of 0.05 MeV to 1.25 MeV relative to 0.662 MeV energy is not more than ± 25 %.

3.2.8 Anisotropy at gamma quantum incidence at solid angle of ± 60^0 relative to the main measurement direction (perpendicular to the front panel of the dosimeter), not more than:

- 25 % - for ^{137}Cs and ^{60}Co radionuclides;
- 85 % - for ^{241}Am radionuclide.

3.2.9 Time of operating mode setting at DER measurement, not more than:

- from $1 \cdot 10^{-6}$ Sv/h to $5 \cdot 10^{-6}$ Sv/h (inclusive), maximum 30 minutes;
- from $5 \cdot 10^{-6}$ Sv/h to $2 \cdot 10^{-5}$ Sv/h (inclusive), maximum 5 minutes;
- from $2 \cdot 10^{-5}$ Sv/h to 1.0 Sv/h, maximum 3 min.

3.2.10 Time of DER measurement, not more than:

- 10 s – in the DER range of 1.0 μSv/h to 10.0 μSv/h;
- 5 s – in the DER range of 10.0 μSv/h to 1.0 Sv/h.

3.2.11 Minimum DE measurement time expressed in seconds should not exceed the value calculated by the formula:

$$t = \frac{7200}{\dot{H}_p(10)}, \qquad (3.1)$$

where $\dot{H}_p(10)$ - a numeric value of DER in μSv/h.

3.2.11.1 The minimum time of DE measurement expressed in seconds, when the main relative permissible error limit of measurement complies with the requirements of 3.2.4, does not exceed the value, calculated by the formula:

$$t = \left(60 + \frac{36000}{\dot{H}_p(10)} \right), \qquad (3.2)$$

where $\dot{H}_p(10)$ - is a numeric value of DER in μSv/h.

3.2.12 Continuous operation time when powered from freshly charged storage battery under normal background is at least 3000 hours.

3.2.13 Unstable readings during 8 hours of continuous operation, not more than 5 %.

3.2.14 The dosimeter is powered from Li-ion storage battery of 3.2 V to 4.2 V voltage and a rated capacity of 120 mAh.

Note. Operating DC supply voltage - 3.7 V.

3.2.15 Dimensions, not more than:

- length - 90 mm;
- height - 55 mm;
- width - 10 mm.

3.2.16 Weight, not more than 0.08 kg.

3.2.17 The dosimeter performs measurements under the following conditions:

- temperature – from - 20 ^{0}C to + 50 ^{0}C;
- relative humidity – (95±3) % at + 35 ^{0}C temperature;
- atmospheric pressure – from 84 kPa to 106.7 kPa.

3.2.18 The dosimeter is resistant to sinusoidal vibrations by group N1 in compliance with recommendations of GOST 12997-84 standard with 10 Hz to 55 Hz frequency, frequency bias 0.15 mm lower than the crossover frequency.

3.2.19 The dosimeter is resistant to shocks according to recommendations of GOST 12997-84 with the following parameters:

- shock pulse duration – 9.5 ms;
- number of shocks - 1000±10;
- maximum shock acceleration - 100 m/s^2.

3.2.20 The dosimeter in shipping container endures:

- ambient air temperature – from – 30 ^{0}C to + 50 ^{0}C;
- relative humidity – (95±3) % at + 35 ^{0}C temperature;
- shocks with acceleration of 98 m/s^2, shock pulse duration of 16 ms (number of shocks - 1000±10 in each direction) or equivalent shake tests.

3.2.21 The dosimeter remains unaffected by constant and alternating magnetic field of (50±1) Hz frequency and 400 A/m intensity.

3.2.22 The dosimeter is immune to gamma and X-ray radiation with 10 Sv/h DER for 50 minutes.

3.2.23 The dosimeter features “Clock” and “Alarm clock” operating modes.

3.2.23.1 The alarm clock rings during one minute or until a button is pressed.

3.2.24 The dosimeter has a threshold alarm system with two independent threshold levels:

- DER;
- DE.

3.2.24.1 The values of DER threshold levels are programmed within the range from 0 to 999 999 μSv/h with a discreteness of 0.01 μSv/h.

3.2.24.2 The values of DE threshold levels are programmed within the range from 0 to 9999 mSv with a discreteness of 0.001 mSv.

3.2.24.3 The programmed values of threshold levels are saved in the nonvolatile memory of the dosimeter and are not changed when the dosimeter is switched on/off or the storage battery is replaced.

3.2.25 The dosimeter sends audio and light signals if the programmed DER or DE threshold level is exceeded.

3.2.25.1 The dosimeter sends an interrupted audio signal when 90 % of the programmed threshold level of DE is reached. Press any button to switch this audio signaling off.

3.2.26 DER and DE values as well as DER and DE threshold level values alternately appear on the digital liquid crystal display (dLCD).

3.2.26.1 The dosimeter displays the statistical error of DER measurement result. Indication is performed by a blinking or steady decimal point in the DER measurement mode.

3.2.27 The dosimeter provides an option to charge the storage battery from an external charger.

3.2.27.1 The dosimeter displays the process of charging the storage battery and its completion. Two-color LED is used for indication.

3.2.27.2 Low battery is charged within not more than 5 hours.

3.2.28 The dosimeter constantly monitors and displays the storage battery discharge level on the dLCD. It is displayed with the help of the battery symbol.

3.2.29 The dosimeter ensures self-testing of the dLCD and the loudspeaker, which is done when the dosimeter is switched on.

3.2.30 The dosimeter records and displays on the dLCD a sign of DER outranging the upper limit of the measurement range during the device operation.

3.2.31 Design of the dosimeter provides for its deactivation.

3.2.32 Reliability requirements

3.2.32.1 Mean time to failure, not less than 6000 h. Failure criterion is nonconformity to the requirements stated in 3.2.2.

3.2.32.2 Average value of operational readiness, not less than 0.999.

3.2.32.3 Mean time to repair, not less than 10000 h, and average service life (with the storage battery replacement) - not less than 10 years.

Limit state criterion is deviation of parameters from the values stated in 3.2.2 that cannot be eliminated.

3.2.32.4 Average shelf life (with the storage battery replacement) - not less than 10 years.

3.2.33 Service capabilities of the dosimeter being functionally compatible with the personal computer (the PC) with the installed ASIDC SW.

3.2.33.1 The dosimeter supports recording the history of dose accumulation during a working shift (8 h) in the nonvolatile memory. Recording is done with reference to real time. The recording interval is programmed in the range of 5 minutes to 255 minutes with one min discreteness.

3.2.33.2 The dosimeter is able to transfer the history of dose accumulation to the ASIDC SW on the PC via the infrared port. The distance of positive exchange between the dosimeter and the infrared port adapter (IRPA) is not more than 0.3 m.

3.2.33.3 Coupled with the ASIDC SW, the dosimeter enables:

- blocking the option to turn the dosimeter off until its accumulated data is read;
- blocking the modes of indication (DER, DER threshold, DE, DE threshold, clock and alarm clock); change (DER threshold, DE threshold) and adjustment of clock and alarm clock settings.

3.2.33.4 The dosimeter features an option to record a sign of DER outranging the upper limit of the measurement range during device operation in the non-volatile memory and send it to the ASIDC SW.

3.3 Delivery kit of the dosimeter

3.3.1 The delivery kit is presented in Table 3.1.

Table 3.1 – Delivery kit of the DKG-21 dosimeter

Item	Type	Quantity
Personal gamma radiation dosimeter DKG-21	BICT.412118.030-02	1
Storage battery *	LIR2450 (EEMB Battery)	1
Charging device **	Model is not specified	1
Operating manual	BICT.412118.031-02 HE	1
Case	Model is not specified	1
Package	BICT.412915.048-02	1
USB/IrDA adapter	BICT.468353.056-02	1***
Software ****		1***

* Storage batteries of other manufacturers are allowed provided that they are not inferior to the specified characteristics and ensure safety, quality and reliability.
** micro-USB, 5 V, 0.5 A.
*** Supplied at a separate order.
**** Application software for PCs running Windows OS enabling data exchange with the personal dosimeter.

3.4 Design and principle of operation

3.4.1 General information

The dosimeter is presented as a mono block including a built-in detector of gamma and X-ray radiation, a printed circuit board equipped with a circuit of anode voltage formation, digital processing, control and indication, an infrared port of data exchange, and a Li-Ion battery.

Gamma and X-ray radiation detector transforms radiation into the sequence of voltage pulses; the number of pulses is proportional to the registered radiation intensity.

The circuit of anode voltage formation, digital processing, control and indication features:

- scaling and linearization of the counting response of the detector;
- measurement of DER through measurement of the average pulse frequency from the detector output;
- measurement of DE through measurement of the total number of pulses from the detector output;

- measurement of real time;
- formation and stabilization of the anode voltage of the detector;
- formation of supply voltage and control of the storage battery charging process;
- control of operating modes of the dosimeter;
- indication of measurement results.

Power for operation is supplied by a disk-shaped lithium-ion battery of LIR2450 type (EEMB Battery).

3.4.2 **Design description**

The dosimeter is designed as a flat square plastic body (Figure B.1, B.2), which consists of an upper (1) and a lower (2) covers, a battery compartment lid (3), a film front panel (4) and a metal ring (5) used to fasten a strap.

A transparent window, with the dLCD (6) located behind it, is in the left upper corner of the front panel. Two smaller windows for the optical system of the infrared port (7) and the light-emitting diode indicator (8) are located next to this window. In the top right corner of the front panel there is a transparent window of the LED indicator (9) for displaying storage battery charging process and its completion. Two membrane control keys (10) with corresponding inscriptions are located in the right lower corner of the front panel. A connector (11) for the charging device is located on the right sidepiece of the body.

The printed circuit board is inside the body, where all elements of the electric circuit, with an exception of the loudspeaker and the storage battery, are located. The loudspeaker is located in a cylindrical sound chamber done as a construct of the upper cover. The loudspeaker is mechanically fastened and electrically connected with the circuit by three contact springs located on the printed circuit board.

The components of the device and the printed circuit board are fastened with five screws. The storage battery (12) is inserted into the battery compartment (13), and connected to the circuit by two spring contacts. The inscriptions that specify polarity of the storage battery insertion are applied at the bottom of the battery compartment.

3.4.3 **Operation of the dosimeter**

3.4.3.1 Operation of the dosimeter shall be considered by the structural diagram according to Figure C.1.

According to the structural diagram the dosimeter consists of the storage battery (SB), charging control and indication circuit (CCS), voltage stabilization circuit (VSC), buttons MODE and THRESHOLD, digital processing and control circuit (DPC), anode voltage former for the detector of ionizing radiation (AVF), detector control circuit (DCC), non-volatile memory (NVM), infrared port scheme (IrPS), loudspeaker (LS) and dLCD.

Buttons MODE and THRESHOLD serve to switch on the dosimeter, set the required mode of operation and program threshold levels of audible alarm.

CCS is implemented on an application-specific integrated circuit and provides SB charging and indication of charging process and its completion. Additional radioelements protect CCS from power surges and impulse noise.

VSC is implemented under a circuit of pulsed voltage converter with an additional linear voltage stabilizer (LVS) and ensures formation of stable voltage to supply power to all nodes of the dosimeter.

DPC is implemented on the basis of a special-purpose processor and is used to control the operating modes of the dosimeter, control the anode voltage former, digital processing of pulse sequences from the ionizing radiation detector, generate signals that control dLCD, and display signs of measurement modes.

AVF is built under the waiting multivibrator circuit with transformer voltage multiplication and subsequent asymmetric diode capacitive voltage multiplier, and is used to form the anode voltage, required for operation of the ionizing radiation detector.

DCC is realized on the basis of a number of switching and normalizing elements and is used for normalization of the detector’s "dead time".

NVM is implemented on the basis of EEPROM and is used to record the dose and time history.

A piezoacoustic transducer which serves for audible alarm if the programmed DER or DE threshold levels are exceeded and when the alarm clock goes off, has been used as the LS.

The detector of ionizing radiation (DIR) is the energy-compensated gas-discharge Geiger-Muller counter. It is designed to detect gamma and X-ray radiation, parameters of which are measured by the dosimeter.

dLCD is a sign-character liquid crystal display with LED illumination, and is used to visualize measurement results in different modes of operation of the dosimeter.

3.4.3.2 The dosimeter operates as follows.

If switched off, the dosimeter's circuit is in a micro-consuming mode of operation (μA units), the circuit is powered from LVS. In this state the processor supports only the process of real-time countdown.

Press briefly the MODE button and the processor switches to the active state, switches on the VSC and issues signals of control to the AVF, which starts forming the anode voltage for operation of the Geiger-Muller counter. At the same time the processor is switched on to the priority mode of DER measurement, as evidenced by the symbol of dimension "μSv/h" on the dLCD. By assessing the intensity of the pulse flow from the Geiger-Muller counter, the processor automatically sets the interval and the measurement subrange.

Using the DCC the processor normalizes the duration of "dead time" at each actuation of the counter with high accuracy, which allows considering it in the applied algorithm of pulse flow processing for linearization of counting response and expansion of the dynamic range of the counter.

Choose the respective operating modes of the dosimeter by successive short presses of the MODE button. The processor each time initiates the display of information correspondence signs on the dLCD in the form of appropriate symbols. By clicking THRESHOLD in the corresponding measurement mode, the processor switches to the mode of programming of sound and light alarm actuation threshold values or adjustment of clock or alarm clock time setting.

Turn off the dosimeter at its stand-alone use by pressing and holding down the MODE button for more than 4 seconds.

3.5 Labeling and sealing

3.5.1 Labeling complies with the Design Documentation BICT.412118.031-02.

3.5.2 The front panel of the dosimeter is inscribed with the:

- full name of the dosimeter;
- trademark of the manufacturer;
- a sign of a legally regulated Measurement Instrument in accordance with the Technical Regulations.

3.5.3 The rear panel of the dosimeter is inscribed with:

- “Made in Ukraine”;
- name of the manufacturer;
- ТУ number;
- serial number of the dosimeter according to the numbering system of the producer-enterprise;
- ingress protection rating – “IP31” according to DSTU EN 60529:2018;
- mechanical center of the detector with a “+” symbol;
- a month and a year of manufacture.

3.5.4 Labeling quality complies with the recommendations of GOST 26828-86 and is maintained during service life under all conditions and modes, except for labeling done on the individual package.

3.5.5 The dosimeter accepted by the Quality Control Department (QCD) and prepared for packing is sealed with a special film seal, covering the screw heads, which fasten together the upper and the lower covers, or a paste seal in the hollow above the head of the fastening screw.

3.5.6 The container in accordance with GOST 14192-96 is inscribed with:

- full name of the dosimeter;
- serial number of the dosimeter according to the numbering system of the producer-enterprise;
- a month and a year of manufacture;
- basic marks (name of consignee and destination);
- additional signs (name of consignor and point of departure);

- information signs (gross and net weight in kg);
- handling marks (No.1 "Fragile-Handle with care", No.3 "Keep dry", No.11 "Top").

3.5.7 Transport container with the packed dosimeter shall be sealed by the QCD representative of the manufacturer in accordance with GOST 18680-73.

3.6 Packing

3.6.1 Packing is performed in accordance with the requirements specified in Design Documentation BICT.412118.031-02.

3.6.2 The dosimeter is packed in a special cardboard box, which (together with the operating manual), in its turn, is placed in a transparent polyethylene package, welded after packing performed.

4 PROPER USE OF THE DOSIMETER

4.1 Operating limitations

4.1.1 Operating limitations are presented in 3.2.14, 3.2.17 - 3.2.22.

4.2 Preparation of the dosimeter for operation

4.2.1 The scope and order of external examination

4.2.1.1 Before using the dosimeter, unpack it and check if the delivery kit is complete. Examine for mechanical damages.

4.2.2 Rules and order of examination for operational readiness

4.2.2.1 Examine the control buttons before switching the dosimeter on.

4.2.2.2 Open the battery compartment and make sure the storage battery is inserted, connections are reliable, and there is no leakage of salts after long-term storage of the dosimeter. In case of salt leakage, remove the storage battery. Clean it, if possible, or replace, if not. Insert the storage battery and close the battery compartment with the lid.

4.2.3 **Charging the storage battery**

4.2.3.1 The storage battery should be charged with a charger included in the delivery kit. The storage battery should be in the battery compartment during that. The use of similar chargers or USB-ports of a PC are also allowed.

Charging should be carried out at ambient temperature ranging from 0 to 45 ^{0}C.

The lithium-ion battery of the dosimeter has no memory effect, so you can charge the battery regardless of its state of discharge.

4.2.3.2 To charge the storage battery, unpack the charger and connect it to the industrial network of 100-240 V, 50-60 Hz. Insert a plug (1) of the charger (2) into the dosimeter's inlet (3) according to Figure B.3. While the dosimeter's storage battery is being charged red LED is lit. At the end of charging, a red LED turns off while a green one lights up. Then you should disconnect the dosimeter from the charger, and the charger from the network.

4.2.3.3 The storage battery may be charged with the dosimeter on or off.

4.2.4 **Guidelines on switching on and testing the dosimeter**

4.2.4.1 Prepare the dosimeter for operation. Do the following:

- unpack the dosimeter;
- open the battery compartment and insert the storage battery of LIR2450 type observing the polarity. The dosimeter should turn on and conduct a 2-second self-testing of the dLCD and the loudspeaker.

During the self-test, the dLCD illumination should be switched on and all its segments should be highlighted, a single-tone sound signal should be generated, and a red LED should be illuminated. The absence of any of these actions indicates a malfunction of the dosimeter.

Upon completion of the dLCD self-testing the dosimeter switches to the mode of DER measurement indicated by “μSv/h” measurement units, which are constantly displayed on the dLCD.

4.2.4.2 Press shortly the MODE button and make sure the dosimeter has entered the mode of DE indication. DE units of measurement expressed in “mSv” should appear on the dLCD.

4.2.4.3 Press shortly the MODE button and make sure the dosimeter has entered the mode of real time indication, which is shown by a one-second blinking colon between the two pairs of dLCD digits.

4.2.4.4 Press shortly the MODE button and make sure the dosimeter has entered the mode of the alarm clock setting, which is indicated by a non-blinking colon between the two pairs of digits on the dLCD.

4.2.4.5 Switch off the dosimeter by holding the MODE button pressed for 4 s.

4.2.5 **List of possible troubles and troubleshooting**

4.2.5.1 The list of possible troubles and troubleshooting is presented in Table 4.1.

Troubles during usage period shall be registered in the Table of the Appendix F of the OM.

Table 4.1 - Possible troubles and troubleshooting

Trouble	Probable cause	Solution
1 The dosimeter does not switch on after the MODE button is pressed	1 Storage battery is low 2 Poor contact between the storage battery and the battery compartment clamps 3 Storage battery failure	1 Charge the storage battery 2 Restore the contact between the storage battery and the clamps 3 Replace the storage battery
2 “Err” symbol is displayed on the dLCD after the battery has been replaced	Failure of the nonvolatile memory of the dosimeter	Send the dosimeter for repair to the manufacturer

Table 4.1 (continued)

Trouble	Probable cause	Solution
3 The “Err1” symbol is displayed on the dLCD during operation of the dosimeter	Failure of the anode voltage former or the ionizing radiation detector	Send the dosimeter for repair to the manufacturer
4 The storage battery of the dosimeter does not charge, red LED does not light up	1 Poor contact between the charger and the dosimeter 2 Failure of the charger	1 Disconnect and reinsert the charger plug 2 Replace the charger

4.2.5.2 At failure to eliminate the troubles presented in Table 4.1, or at detection of more complicated troubles, the dosimeter should be sent for repair to the manufacturer.

4.3 Use of the dosimeter

4.3.1 Safety measures during use

4.3.1.1 The dosimeter meets the safety requirements in accordance with DSTU EN 60335-1:2017.

4.3.1.2 The dosimeter contains electric circuits of voltage up to 500 V; dismantle the dosimeter when the power supply is switched off.

4.3.1.3 The dosimeter's design excludes any electric voltages exceeding 42 V on the outside of the dosimeter.

4.3.1.4 A special protective jacket is used to prevent accidental contact with conductive parts.

4.3.1.5 Ingress protection rating is IP31 according to DSTU EN 60529:2018.

4.3.1.6 All works involving dosimeters should be performed in accordance with the requirements of the State Sanitary Regulations DSP 6.177-2005-09-02, State Hygiene Standards DHN 6.6.1-6.5.001 and DHN 6.6.1-6.5.061.

4.3.1.7 Disposal of dosimeters shall be carried out in accordance with DSTU 4462.3.01, DSTU 4462.3.02, the Laws of Ukraine "On Environmental Protection" and "On Waste".

Note. If the dosimeter is contaminated by any liquid or dry radionuclides and it is impossible to completely decontaminate the device, the dosimeter should be buried as solid radioactive waste.

4.3.2 **Operating modes of the dosimeter**

4.3.2.1 The dosimeter operates within the following modes:

- switching the dosimeter on/off;
- switching dLCD illumination on/off;
- DER measurement and indication;
- programming of audio and light alarm threshold levels of DER;
- DE measurement indication;
- programming of audio and light alarm threshold level of DE;
- setting the measured DE value to zero;
- indication and correction of real time;
- indication and correction of the alarm clock settings;
- storage battery status control;
- indication of the storage battery charging process/its completion;
- monitoring of the ionizing radiation detector performance.

4.3.3 **Operation procedure of the dosimeter**

4.3.3.1 **Switching the dosimeter on/off**

Press shortly the MODE button to switch the dosimeter on.

When switched on the dosimeter is testing the dLCD and the loudspeaker for 2 s. All dLCD segments are highlighted and a one-tone sound signal is generated. If some dLCD segments are not highlighted it is indicative of the dLCD malfunction. No sound signal is indicative of the loudspeaker failure.

After that, the dosimeter software version number “P 5.0” will be briefly displayed, and the device will switch to the DER measurement mode, as indicated by the continuously displayed units “µSv/h” on the LCD.

At the same time, the infrared port of the dosimeter is activated for 15 s. While the infrared port is active, you can perform the procedure of data exchange with the PC, program the threshold levels, intervals of dose history accumulation, and permit/prohibit certain operating modes of the dosimeter.

Data for transmission are divided into packets. To verify data integrity, each packet contains a checksum that is checked upon reception. In case of corruption, the packet is retransmitted.

The blinking digits on the dLCD indicate that the infrared port is active. As soon as data exchange with the PC is finished, the dosimeter starts accumulating the dose history with the preset interval.

Otherwise, the dosimeter starts operating in a stand-alone mode with integral dose accumulation without dose history accumulation.

Press the MODE button once again and hold it down for 4 s to switch the dosimeter off. If the dosimeter is switched on in a stand-alone mode, i.e. no data exchange with the PC is done, the dosimeter will switch off. If during switching it on data exchange between the dosimeter and a PC took place, the effort to switch the dosimeter off would only activate the infrared port for 15 s.

4.3.3.2 **Switching dLCD illumination on/off**

To switch on the dLCD backlight, press the THRESHOLD button twice (the time between presses should not exceed 0.5 s). To switch it off, press the THRESHOLD button twice once again.

4.3.3.3 **Measurement of DER**

After dLCD self-testing is finished, the dosimeter enters the mode of DER measurement. This mode can be entered from any other operating mode by shortly pressing the MODE button. The units of measurement are expressed in μSv/h.

The process of DER measurement accumulation and averaging will start after the dosimeter is switched on. The process will continue up to 1600 s at DER values close to background. The data on the dLCD will be updated each 10 s. However, wait 2-3 minutes to get more reliable result. As the radiation intensity increases, the time of DER measurement averaging and the time of data updating on the dLCD falls to the minimum of 2 s.

The units of measurement are expressed in μSv/h, mSv/h, and Sv/h.

The statistical error of the displayed measurement result of DER is indicated by the blinking or steady decimal point.

The blinking point indicates that the statistical error of the indicated DER measurement result exceeds the maximum permissible error.

Hence, the measurement result can be used only for rough evaluation of DER.

The steady point informs that the statistical error of the DER measurement result is within the permissible range.

The main direction of the dosimeter during DER measurement is the direction perpendicular to the front (rear) panel of the dosimeter.

DER measurement result is considered the arithmetic mean of five last measurements in 8 min after the intensity of radiation field is changed at DER levels in the range of 1.0 to 10.0 μSv/h, or within 2 min to 2 s for the levels in the range of 10.0 μSv/h to 1.0 Sv/h.

Measurement intervals and subranges will be set automatically according to the intensity of registered radiation.

Note. The process of data averaging can be restarted forcedly for quick evaluation of DER. This is achieved by pressing and holding down the THRESHOLD button until “CLr” symbols appear on the dLCD. Release THRESHOLD as soon as symbols are displayed. Rough evaluation of DER value will be performed within 1 min.

4.3.3.4 **Programming of audio and light DER alarm threshold level**

Audio and light alarm threshold levels of DER are programmed in the mode of DER measurement.

Press the THRESHOLD button and hold it down for about 5 s until the low-order digit starts blinking on the dLCD to start programming. During the programming of the threshold level, the "ALARM" transparency will be displayed on the dLCD.

Set an appropriate value of the low-order digit by shortly pressing and releasing the THRESHOLD button. Press shortly the MODE button to proceed to programming of another digit, the latter will start blinking. The required value of the digit is set with short pressing and releasing the THRESHOLD button.

After the last digit is programmed and at next pressing of the MODE button, the dLCD will blink four times, indicating that the new value of threshold level has been fixed. The dosimeter will return to the mode of DER measurement.

The threshold level is stored in the nonvolatile memory of the dosimeter. Switching the dosimeter on and off and replacing its battery does not change the threshold level.

Press the THRESHOLD button and hold it down not more than 2 s after a threshold level value and the "ALARM" transparency appear to check the value of the DER threshold level.

A blinking red LED and the "ALARM" transparency, as well as a two-tone sound alarm mean that the programmed DER threshold level has been exceeded.

Important! If the process of the new threshold level programming is paused for more than 30 s (the user presses no buttons of the dosimeter), the dosimeter will automatically return to the mode of DER measurement. All changes made in the submode of new threshold level value programming will be canceled.

Notes

1 DER threshold level value of 1.0 μSv/h is set after the dosimeter is produced.

2 A preset zero value of the DER threshold level sets off the alarm system when the threshold level is exceeded.

4.3.3.5 **Indication of DE measured value**

Press shortly the MODE button to enter the mode of DE measurement indication. This mode follows the mode of DER measurement. The “mSv” symbol that appears on the dLCD indicates you have entered the appropriate mode.

If during operation of the dosimeter DER exceeded the upper limit of the measurement range, the measured DE value may be incorrect (too low). In this case, a blinking decimal point in the mode of DE measurement indication may indicate to a possible incorrectness of DE value.

4.3.3.6 **Programming of audio and light DE alarm threshold levels**

Audio and light alarm threshold level of DE is programmed in the mode of DE measurement indication.

Press the THRESHOLD button and hold it down for about 5 s until the low-order digit starts blinking on the dLCD to start programming. During programming of the threshold level, the "ALARM" transparency will be also displayed on the dLCD.

Set an appropriate value of the low-order digit by successively pressing and releasing the THRESHOLD button. Press shortly the MODE button to proceed to programming of another digit, the latter will start blinking. Set the required value of the digit by pressing and releasing the THRESHOLD button.

After the last digit of the threshold level is set and at next pressing of the MODE button, the dLCD will blink four times, indicating that the new value has been memorized, and the dosimeter will return to the mode of DE indication.

The threshold level is stored in the nonvolatile memory of the dosimeter. Switching the dosimeter on and off and replacing its battery does not change the threshold level.

Press the THRESHOLD button and hold it down for maximum 4 s after a threshold level value and the "ALARM" transparency appear to check the value of the DE threshold level.

Hold the THRESHOLD button down for more than 4 s to set the threshold value to zero. The low-order digit will start blinking at that indicating that a new threshold level value can be programmed.

A blinking red light-emitting diode and the "ALARM" transparency, as well as a two-tone audio alarm indicate that the programmed DE threshold level has been exceeded.

To inform the user that the DE threshold level is likely to be quickly reached, the dosimeter sends an interrupted audio signal when 90 % of the programmed threshold level is achieved. Press any button to switch this audio alarm off.

Important! If the process of the new threshold level programming is paused for more than 30 seconds (the user presses no buttons of the dosimeter), the dosimeter will automatically return to the mode of DE measurement indication. All changes made will be canceled.

Note. The DE threshold level value of 0.000 mSv is set automatically after the dosimeter is produced indicating that the alarm is switched off.

4.3.3.7 **Setting the measure DE value to zero**

Setting DE measured value to zero is performed in the mode of DE measurement indication. To reset the DE, simultaneously press and hold MODE and THRESHOLD buttons until “CLr” symbols appear on the dLCD of the dosimeter. As soon as “CLr” symbols are displayed, release the MODE and THRESHOLD buttons.

Shortly press the MODE button to confirm DE reset. The “CLr” symbols will blink three times and the dosimeter will return to the mode of DE measurement indication as a confirmation of reset. To cancel reset, press shortly the THRESHOLD button, or do not press the buttons for 30 seconds (in this case, the dosimeter will automatically return to the mode of DE measurement indication).

4.3.3.8 **Indication and correction of real time**

Press shortly the MODE button to enter this mode from any other mode of operation. This mode follows the mode of DE measurement indication.

It is indicated by a one-second blinking “:” symbol between the two pairs of the dLCD digits.

The digits from the right to the left show the following: the first digit indicates minutes; the second one - tens of minutes; the third one - hours; the fourth one - tens of hours.

Press the THRESHOLD button and hold it down until the two digits to the right from the “:” symbol start blinking to correct the value of real time. Release the button afterwards. The proper values of units and tens of minutes are fixed by further pressing and holding the THRESHOLD button. The minutes can also be corrected by shortly pressing the THRESHOLD button.

Each pressing will change the value per unit. Press shortly the MODE button to correct the value of hours. The two digits to the left from the “:” symbol start blinking at that. The hour value correction is performed likewise. Press shortly the MODE button once again to exit the mode of real time correction.

Important! If the process of the clock settings correction is paused for more than 30 seconds (the user will not press the buttons of the dosimeter), the dosimeter will automatically return to the mode of real time indication. All changes made will be canceled.

4.3.3.9 **Indication and correction of alarm clock settings, switching alarm clock on/off**

Press shortly the MODE button to enter this mode from any other operating mode. This mode follows the mode of real time indication. A non-blinking “:” symbol between the two pairs of digits on the dLCD indicates you have entered the appropriate mode.

Press the THRESHOLD button and hold it down until the two digits to the right from the “:” symbol start blinking to correct the alarm clock settings. Release the button afterwards. Set the proper values of units and tens of minutes by further pressing and holding the THRESHOLD button. The minutes can also be corrected by short pressing of the THRESHOLD button. The value will change per unit each time in this case. Press shortly the MODE button to correct the value of hours. The two digits to the left from the “:” symbol start blinking at that. Hour values can be corrected likewise.

Press shortly the MODE button to switch the alarm clock on/off after setting its triggering time. A blinking "WARNING" transparency should appear on the digital dLCD.

Press shortly the THRESHOLD button; make the non-blinking "WARNING" transparency appear on the dLCD to switch the alarm clock on.

Press shortly the THRESHOLD button to switch the alarm clock off. The "WARNING" transparency should extinct. Memorize the alarm clock settings by further short pressing of the MODE button. This is evidenced by a four-time blinking of the dLCD of the dosimeter.

If the alarm is on, the "WARNING" transparency will be displayed on the dLCD in the mode of indication of the alarm triggering time.

Important! If the process of the alarm clock settings correction is paused for more than 30 seconds (the user will not press the buttons of the dosimeter), the dosimeter will automatically return to the mode of the alarm clock triggering time indication and correction. All changes made will be canceled.

Note. The alarm clock will continue working even if the dosimeter is switched off (provided that the storage battery is inserted). The dosimeter will automatically enter the mode of real time indication when the alarm clock goes off. Press any control button to switch off audio signal of the alarm clock. Otherwise, audio signal will be disabled automatically in a minute after the alarm clock rings.

4.3.3.10 **Storage battery status control**

When switched on, the dosimeter continuously controls and displays a storage battery status on the dLCD.

It is indicated by a battery symbol consisting of four segments. When the battery is fully charged, all segments of the battery symbol are highlighted. When the battery is gradually discharging, segments stop to be highlighted one by one. When the battery is fully discharged, none of the segments are highlighted, the battery status symbol circuit flashes, and short beeps continue.

Three and more flashing segments mean that the storage battery should be charged.

4.3.3.11 **Operability check of the detector**

The dosimeter monitors the detector's operability as soon as it is switched on. If the detector is out of order, the "Err1" symbol is displayed on the dLCD, which means the dosimeter should be sent for repair.

5 TECHNICAL MAINTENANCE

5.1 Technical maintenance of the dosimeter

5.1.1 General instructions

The list of operations performed during technical maintenance (hereinafter called TM) of the dosimeter, the order and the peculiarities of operational phases are presented in Table 5.1.

Table 5.1 - List of operations during technical maintenance

Operations	TM type			OM item No.
	during		During long-term storage	
	everyday use	periodical use (annually)		
External examination	+	+	+	5.1.3.1
Delivery kit completeness check	-	+	+	5.1.3.2
Operability check	+	+	+	5.1.3.3
Power supply disconnection	-	+	+	5.1.3.4
Verification of the dosimeter	-	+	+	5.2
Note. “+” means the operation is applicable for this type of TM; “-” means the operation is not applicable.				

5.1.2 Safety measures

5.1.2.1 TM safety measures fully comply with safety measures stated in item 4.3.1 of the present OM.

5.1.3 Maintenance procedure of the dosimeter

5.1.3.1 External examination

External examination of the dosimeter should be performed in the following order:

- check the technical condition of surface, inspect for integrity of seals, absence of scratches, traces of corrosion, surface damage of the dosimeter;
- check the condition of clamps in the battery compartment.

5.1.3.2 Delivery kit completeness check

Check if the delivery kit is complete according to Table 3.1.

5.1.3.3 Operability check of the dosimeter.

5.1.3.3.1 Operability check of the dosimeter is performed according to item 4.2.4 of the present OM.

5.1.3.3.2 Procedure for pre-repair fault detection and rejection

The need to transfer the dosimeter for repair and the type of repair is determined by the following criteria:

- for mid-life repair:

a) deviation of parameters from control values during periodic verification of the dosimeter;

b) minor defects of the dLCD that do not affect the correct readings of measurement results;

c) the lack of sound and light alarm;

- for major repair:

a) failure of the measurement channel;

b) defects of the dLCD that affect the correct readings of measurement results;

c) serious mechanical damage to the parts that affect the security access to the dosimeter's circuit.

5.1.3.4 Power supply switch off

Storage battery should be removed before the long-term storage of the dosimeter. Do this as follows:

- fully charge the storage battery;
- switch the dosimeter off;
- open the lid of the battery compartment;
- remove the storage battery;

Important! Do not deform, disassemble, short the poles, heat or place the storage battery near open flame. These may result in fire, explosion or failure of the storage battery.

- examine the battery compartment, check the contact clamps, clean the battery compartment from contamination and contact clamps from oxides;
- make sure there is no humidity, no salt spots on the surface of the storage battery.

5.2 Verification

5.2.1 The DKG-21 dosimeter should be verified during use and after repair.

IMPORTANT!

Devices used in the automated dosimetry control system and are handed over for verification must be unlocked as regards the prohibition of access to all their modes of operation (indication of individual dose equivalent, individual dose equivalent rate, programming of alarms triggering by threshold levels of individual dose equivalent and its rate).

5.2.2 The interval between verifications should not exceed 12 months.

5.2.3 Verification operations are presented in Table 5.2.

Table 5.2 - Verification operations

Operation name	Verification technique No.
External examination	5.2.7.1
Testing	5.2.7.2

Table 5.2 (continued)

Operation name	Verification technique No.
Calculation of main relative permissible error limit of DER measurement in the DER range of 1.0 μSv/h to 1.0 Sv/h	5.2.7.3, 5.2.7.4
Calculation of main relative permissible error limit of DE measurement in the DER range of 1.0 μSv/h to 1.0 Sv/h in the DE range of 0.01 to 9999 mSv	5.2.7.3, 5.2.7.5
Presentation of verification results	5.2.7.6

5.2.4 Verification facilities are presented in Table 5.3.

Table 5.3 - Verification facilities

Name	Regulatory Document or Main Technical Specifications
УПГД-3Б testing equipment	DER range from 0.01 μSv/h to 1 Sv/h. Energy range from 59 keV to 1.25 MeV. Main relative permissible error limit of DER and DE is 4 % at 0.95 confidence probability

Table 5.3 (continued)

Name	Regulatory Document or Main Technical Specifications
Phantom	Dimensions: 30 × 30 × 15 cm; PMMA walls (polymethylmethacrylate, front wall thickness – 2.5 mm, other walls thickness – 10 mm); phantom is filled with distilled water
MB-4M Aspiration psychrometer	Л82.844.000 ПС. Temperature measurement range from - 30 °C to + 50 °C. Temperature measurement error is ± 0.1 °C. Relative humidity measurement range from 10 % to 100 %. Relative humidity measurement error from ± 12 % at t = -10 °C to ± 2 % at t = 30 °C
Stopwatch	Measurement range from 1 s to 59 min
M-67 Control aneroid barometer	Л62.832.003 ПС. Pressure measurement range from 81.3 kPa to 105.3 kPa (from 610 to 790 mm Hg). Pressure measurement error is ± 0.107 kPa (0.8 mm Hg)

Notes

1. Measurement equipment shall be applied according to the law in the field of metrology and metrological activity.
2. It is allowed to use measuring instruments, tools and equipment with technical characteristics equal with those given in Table 5.3.

5.2.5 Verification should be performed in accordance with safety measures presented in item 4.3.1 of the OM.

5.2.6 Verification conditions

Verification should be performed under the following conditions:

- ambient air temperature range within (20±5) °C;
- relative air humidity from 30 % to 80 %;
- atmospheric pressure from 86 kPa to 106.7 kPa;
- natural background level of gamma radiation should not exceed 0.30 μSv/h;
- storage battery should be fully charged, storage battery voltage should be not less than 4.1 V.

5.2.7 **Verification procedure**

5.2.7.1 External examination

5.2.7.1.1 During external examination the dosimeter should meet the following requirements:

- the delivery kit should be completed as stated in Table 3.1;
- labeling should be accurate;
- QCD seals should not be violated;
- the dosimeter should be free from mechanical damage that may affect its performance.

5.2.7.1.2 If the requirements in 5.2.7.1.1 are satisfied, proceed to the next verification operation.

5.2.7.1.3 If the delivery kit is not completed as stated in Table 3.1, verification should be stopped until the delivery kit is complete.

5.2.7.1.4 If labeling and sealing requirements are not satisfied, and the dosimeter bears the signs of mechanical damages that affect its performance, it can not be verified and should be sent for repair.

5.2.7.2 Testing

5.2.7.2.1 Perform operations stated in item 4.2.4.

5.2.7.2.1.1 If all operations stated in 4.2.3 are performed, proceed to the next test operation.

5.2.7.2.1.2 Even if a single operation stated in 4.2.4 cannot be performed, the dosimeter should not be verified and should be sent for repair.

5.2.7.3 DER and DE measurement should be performed on the phantom with 30x30x15 cm dimensions, with PMMA walls (polymethylmethacrylate, front wall thickness - 2.5 mm, other walls thickness – 10 mm); the phantom should be filled with distilled water.

5.2.7.3.1 During measurement the dosimeter should be placed close to the phantom surface, directed to a gamma source. The indicator of the dosimeter should be directed towards the gamma source.

5.2.7.4 Calculation of the main relative permissible error of DER measurement is performed as follows.

5.2.7.4.1 Prepare the dosimeter for DER measurement and program zero value of DER threshold level.

5.2.7.4.2 Fix the dosimeter on the phantom according to item 5.2.7.3 in the УПГД-3Б carriage so that the mechanical center of the УПГД-3Б collimator coincides with the mechanical center of the detector.

Take five measurements of background DER ($\dot{H}_{рфi}$ (10)) in УПГД-3Б with 10 s interval in thirty minutes after the dosimeter is switched on. Calculate the average DER value in μSv/h by the formula

$$\overline{\dot{H}}_{рф}(10) = \frac{\sum_{i=1}^{10} \dot{H}_{рфi}\ (10)}{5} \qquad (5.1)$$

5.2.7.4.3 Place the УПГД-3Б carriage together with the phantom and the dosimeter in the position, where DER from the source with ^{137}Cs radionuclide is $\dot{H}_{p0}(10)$ = (8±1) μSv/h. Take five measurements of DER with 10 s interval in thirty minutes after irradiation of the dosimeter was started. Calculate the average DER value ($\overline{\dot{H}}_{p\Sigma}(10)$ by the formula (5.1). Calculate the DER value without gamma background DER of the УПГД-3Б by the formula

$$\overline{\dot{H}}_{p}(10) = \overline{\dot{H}}_{p\Sigma}(10) - \overline{\dot{H}}_{рф}(10) \qquad (5.2)$$

Note. The distance between the mechanical center of the source and the mechanical center of the dosimeter's detector is considered to be the distance between the mechanical center of the source and the plane, which is perpendicular to the direction of gamma-quanta beam spreading, and passes through the mechanical center of the dosimeter in this plane.

5.2.7.4.4 Calculate the main relative permissible error limit of DER measurement in percentage following the procedure according to recommendations of DSTU GOST 8.207:2008.

5.2.7.4.5 Perform operations 5.2.7.4.3, 5.2.7.4.4 for DER $\dot{H}_{p0}(10)$ = (8±1) μSv/h in 3 minutes after the dosimeter irradiation start provided that DER measurement time is 5 s, n = 5 and t = 2.78.

5.2.7.4.6 Perform operations 5.2.7.4.5 for DER $\dot{H}_{p0}(10)$ =(900±100) mSv/h.

5.2.7.4.7 Maximum value of all received errors is the limit of main relative permissible error of DER measurement.

5.2.7.4.8 If the main relative permissible error limit of DER measurement at 0.95 confidence probability does not exceed:

- 20 % in the DER range of 1.0 μSv/h to 10 μSv/h;
- 15 % in the DER range of 10 μSv/h to 1.0 Sv/h,

proceed to the next verification operation.

5.2.7.4.9 If the main relative permissible error limit of DER measurement does not meet the requirements stated in 5.2.7.4.8, the dosimeter cannot be verified and should be sent for repair.

5.2.7.5 Calculation of the main relative permissible error limit of DE measurement in the DER range of 1.0 μSv/h to 1.0 Sv/h, in the DE range of 0.01 mSv to 9999 mSv is performed as follows.

5.2.7.5.1 Prepare the dosimeter for DE measurement. The initial DE readings should be “0.000 mSv”.

5.2.7.5.2 Fix the dosimeter on the phantom as stated in 5.2.7.3 in the УПГД-3Б carriage so that the mechanical center of the УПГД-3Б collimator coincides with the mechanical center of the dosimeter's detector.

5.2.7.5.3 Prepare the dosimeter for DE measurement and place the УПГД-3Б carriage together with the phantom and the dosimeter in the position, where DER from the source with ^{137}Cs radionuclide is $\dot{H}_{p0}(10)$ = (80±10) μSv/h and at the same time switch on the stop-watch and place the source into the collimator.

5.2.7.5.4 In the period of time (according to the stop-watch) expressed in seconds and calculated by the formula $t = 3600 + t_{\partial}$, where t_{∂} is the period of time expressed in seconds used to place the source into the collimator, take DE measurement result. Switch the dosimeter off afterwards.

5.2.7.5.5 Calculate the limit of main relative permissible error of DE measurement in percentage by the formula

$$\delta H_p(10) = 1{,}1\sqrt{\left(\frac{H_p(10) - H_{p0}(10)}{H_{p0}(10)}\right)^2 + \left(\frac{\delta H_{p0}(10)}{2}\right)^2}\ , \qquad (5.3)$$

where $H_{p0}(10) = \dot{H}_{p0}(10) \cdot t$ - DE of УПГД-3Б equipment;

$\delta H_{p0}(10) = \sqrt{\left(\delta \dot{H}_{p0}(10)\right)^2 + \left(\delta t\right)^2}$ - main relative permissible error limit of DE of УПГД-3Б equipment;

$\delta t = \dfrac{1.1\sqrt{\left(\Delta t_c\right)^2 + \left(\Delta t_p\right)^2 + \left(\Delta t_\partial\right)^2}}{t}$ - main relative permissible error limit of DE exposure time measurement that should not exceed 5 %;

Δt_c - permissible error limit of the stop-watch;

Δt_p = 1 c - error caused by response of a user;

Δt_∂ = 1 c - error caused by the process of placing the source into the collimator.

5.2.7.5.6 The result of the dosimeter verification is considered positive if the main relative permissible error limit of DE measurement at 0.95 confidence probability does not exceed 15 %.

5.2.7.5.7 If the limit of main relative permissible error of DE measurement does not meet the requirements stated in 5.2.7.5.6, the dosimeter cannot be verified and should be sent for repair.

5.2.7.6 Presentation of verification results

5.2.7.6.1 Positive results of periodic verification and verification after repair are registered in the Table of Appendix G, or by issuing a certificate of verification of legally regulated measuring equipment.

5.2.7.6.2 If the dosimeter is recognized inapplicable for use as a result of verification, it gets the certificate of inadequacy.

6 STORAGE

6.1 The dosimeters should be stored packed under conditions according to category 1 (Л) GOST 15150-69, safe from mechanical damage in dry, ventilated and clean storehouses at the ambient temperature from +5° C to +40 °C and relative humidity up to 80 % at + 25 °C temperature. The storehouse should be free of dust, vapors of acids, alkali and gas that may cause corrosion.

6.2 Maximum shelf life of the dosimeters in packing is 3 years.

7 SHIPPING

7.1 Shipping conditions comply with GOST 15150-69.

7.2 Packed dosimeters may be shipped in any kind of closed vehicles in compliance with conditions 4 (Ж2) GOST 15150-69 (ambient air temperature from – 30 °C to + 50 °C; relative humidity up to (95±3) % at + 35 °C) when the following rules are observed:

- by railway transport – in a clean box car;
- by air transport – in pressurized compartments;
- by water transport – in a dry hold;
- by motor transport – in a closed car.

7.3 The dosimeters in shipping container should be placed and fixed in the vehicle to ensure their stable position throughout the way without displacement, and to avoid shocks.

7.4 Observe the inscriptions on the shipping container at loading and unloading the dosimeters.

7.5 The dosimeters must not be exposed to the influence of atmospheric precipitations during loading-unloading.

7.6 The dosimeters may be delivered by parcel post in conformance with the rules established by the Ministry of Transport and Communications of Ukraine, as well as applicable international rules.

8 DISPOSAL

Disposal of the dosimeter is performed in compliance with DSTU 4462.3.01:2006, DSTU 4462.3.02:2006, the Laws of Ukraine "On Environmental Protection" and "On Waste", i.e. metals are recycled or melted, and plastic parts are dumped.

Note. If the dosimeter is soiled by liquids or dry radionuclides, and it is impossible to completely decontaminate it, it should be buried as solid radioactive waste at the enterprises of UkrDO Radon, or other applicable facilities.

The storage battery that failed or lost its capacity should be packed in a plastic bag and transported to the company for batteries recycling or to the collection station.

9 WARRANTY

9.1 The manufacturer guarantees the conformity of the dosimeter to the technical requirements ТУ У 33.2-22362867-010:2007 provided that the customer observes the guidelines for its use, shipping and storage presented in the operating manual ВІСТ.412118.031-02 НЕ.

9.2 The warranty period of the dosimeter shall terminate and be of no further effect in 24 months after the date of putting it into operation or after the warranty period of storage terminates according to DSTU 7215:2011.

9.3 The warranty period of storage of the dosimeter is 6 months after its manufacture date according to DSTU 7215:2011.

9.4 The warranty period is prolonged for the time when the dosimeter has been under warranty repair.

9.5 Warranty is invalid in case of use, shipping and storage violations, any mechanical damages, or if the warranty seals are violated. In this case the repair is performed at the user's expense.

9.6 After the warranty period terminates, the repair of the dosimeter is performed under separate contracts.

9.7 Warranty and post-warranty repair is done only by the manufacturer.

9.8 Failure of the storage battery shall not be a reason for claim.

10 PACKING CERTIFICATE

The DKG-21 personal gamma radiation dosimeter of BICT.412118.031-02 type with _____ serial number is packed by the Private Enterprise “SPPE “Sparing-Vist Center” in accordance with the requirements specified in ТУ У 33.2-22362867-010:2007.

_____ _____

(position) (signature / print full name)

_____

(year, month, date)

11 CERTIFICATE OF ACCEPTANCE

The DKG-21 personal gamma radiation dosimeter of ВІСТ.412118.031-02 type with _____ serial number is manufactured to meet the technical requirements specified in ТУ У 33.2-22362867-010:2007, and is accepted for use.

QCD head _____

(signature / print full name)

Stamp here

12 PERFORMANCE RECORDS OF THE DEVICE

12.1 Performance records of the dosimeter are provided in Table 12.1.

Table 12.1

Date	Purpose	Operation duration		Duration	Who performed the operation	Signature	Note
		Start	End				

13 CLAIMS

13.1 In case of failure or troubles during the warranty period of the dosimeter, the user should draw up a statement of claim and send the dosimeter to the producer-enterprise.

13.2 All claims are registered in the Table 13.1.

Table 13.1

Date of failure	Claim summary	Action taken	Note

14 ACCEPTANCE AND WARRANTY

The DKG-21 personal gamma radiation dosimeter of BICT.412118.031-02 type with _____ serial number, repair type _____ made by the manufacturer PE “SPPE “Sparing-Vist Center” is accepted in accordance with the requirements specified in ТУ У 33.2-22362867-010:2007 and acknowledged fit for use.

Life till scheduled repair _____ during service life _____ years,

shelf life included _____

PE “SPPE “Sparing-Vist Center” guarantees the conformity of the dosimeter to the technical requirements specified in ТУ У 33.2-22362867-010:2007 provided that the customer observes the requirements of the operating manual.

QCD head _____
(signature / print full name)

Stamp here _____
(year, month, date)

APPENDIX A

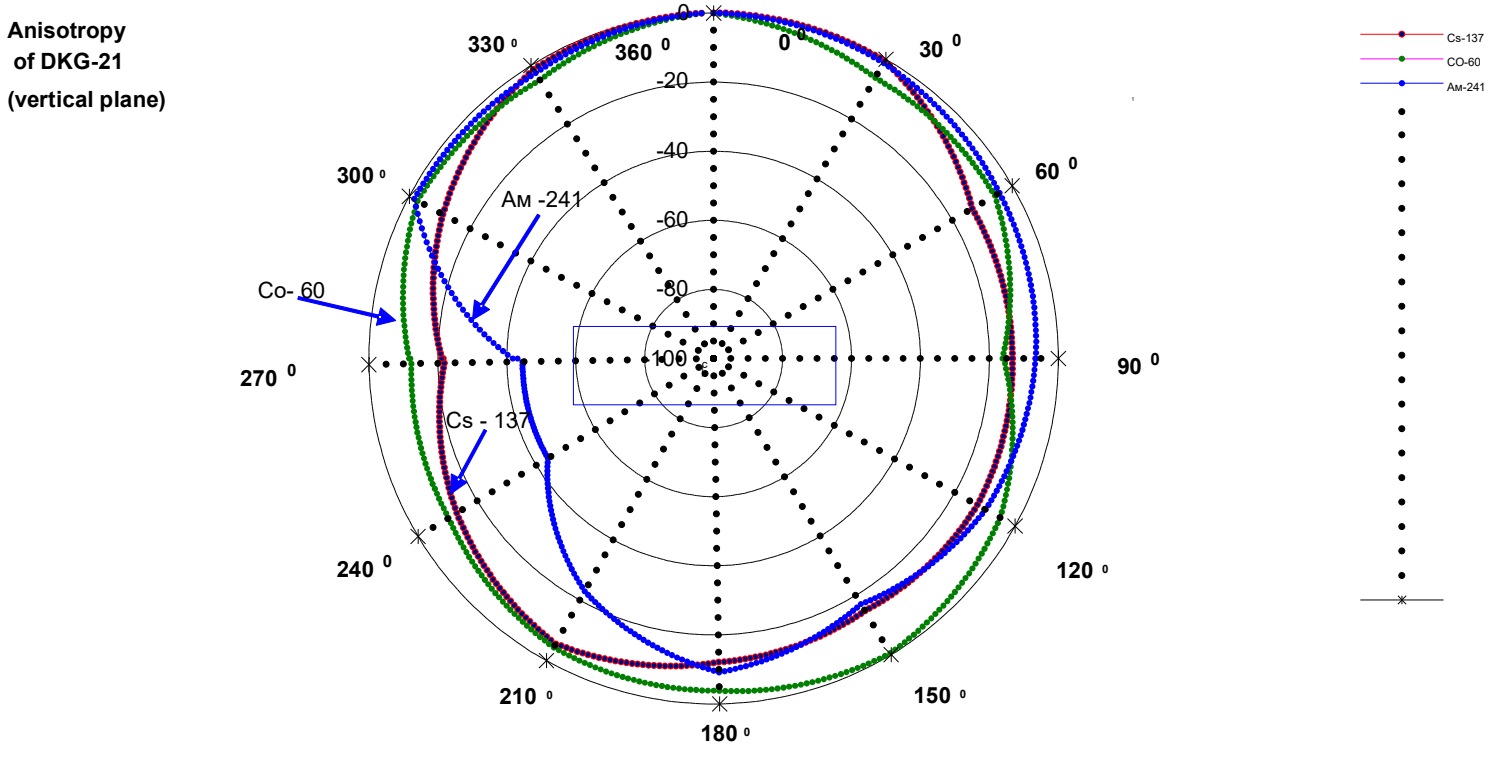

Figure A.1

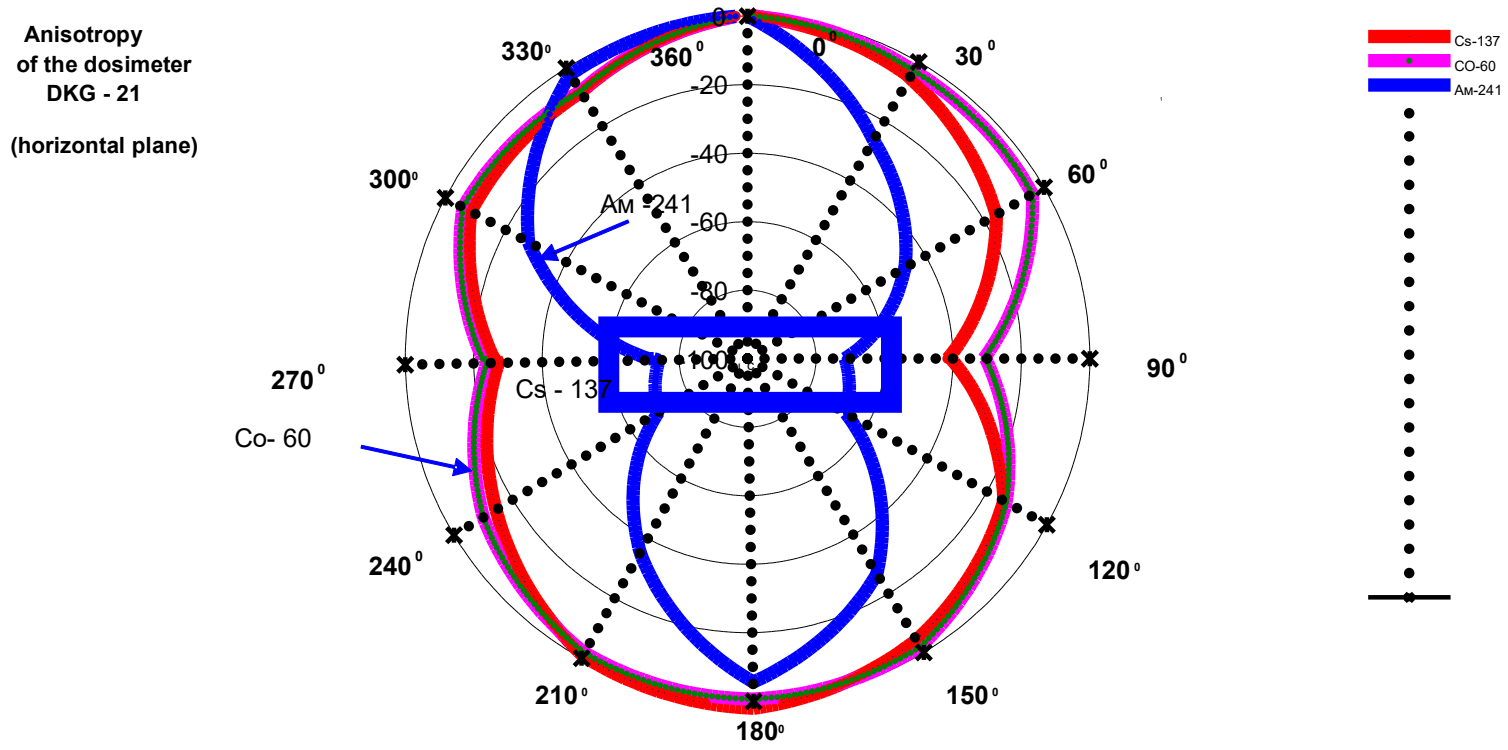
Anisotropy
of the dosimeter
DKG - 21
(horizontal plane)
0
-20
-40
-60
-80
-100
0°
30°
60°
90°
120°
150°
180°
210°
240°
270°
300°
330°
360°
Am -241
Cs - 137
Co- 60
Cs-137
CO-60
Am-241

Figure A.2

APPENDIX B

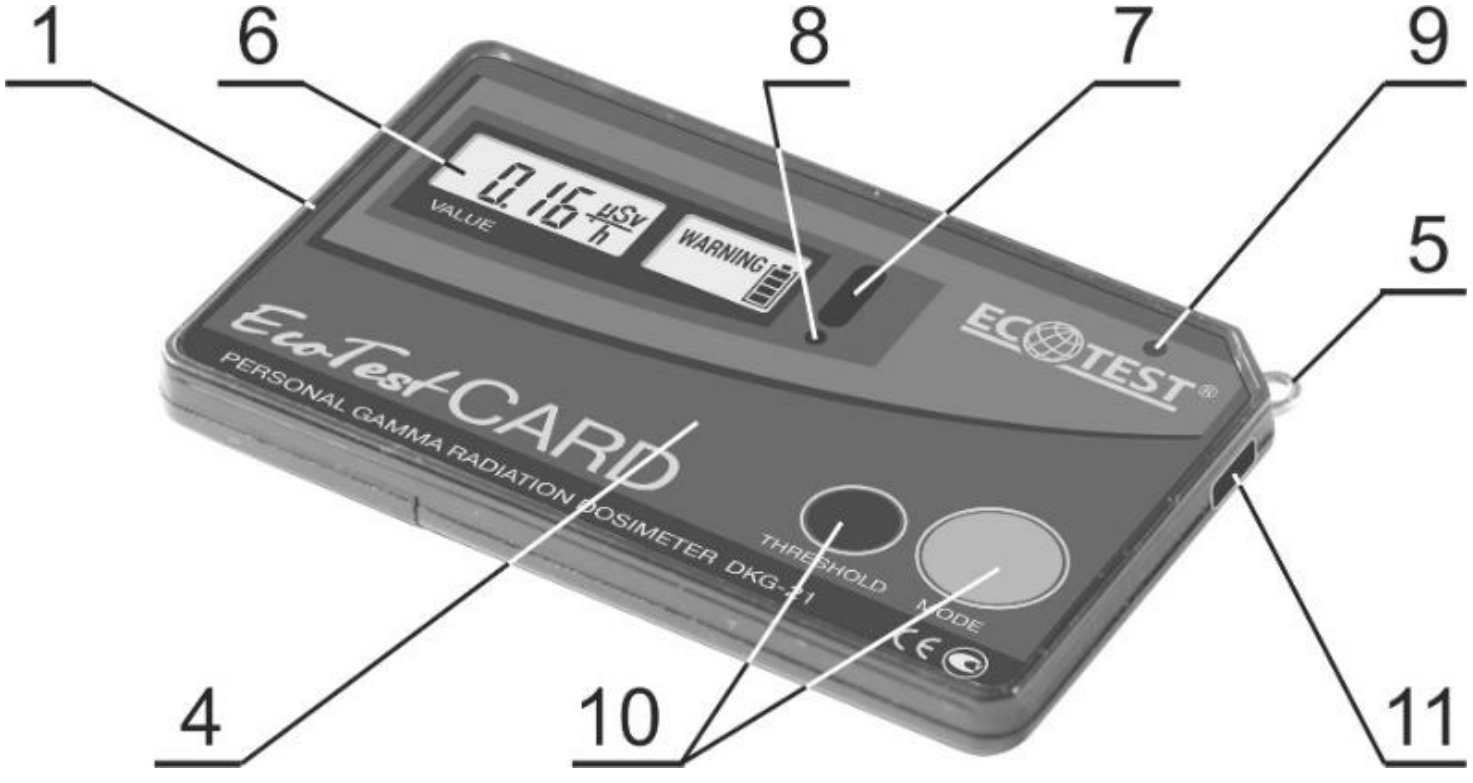

Figure B.1 – Front view of the dosimeter

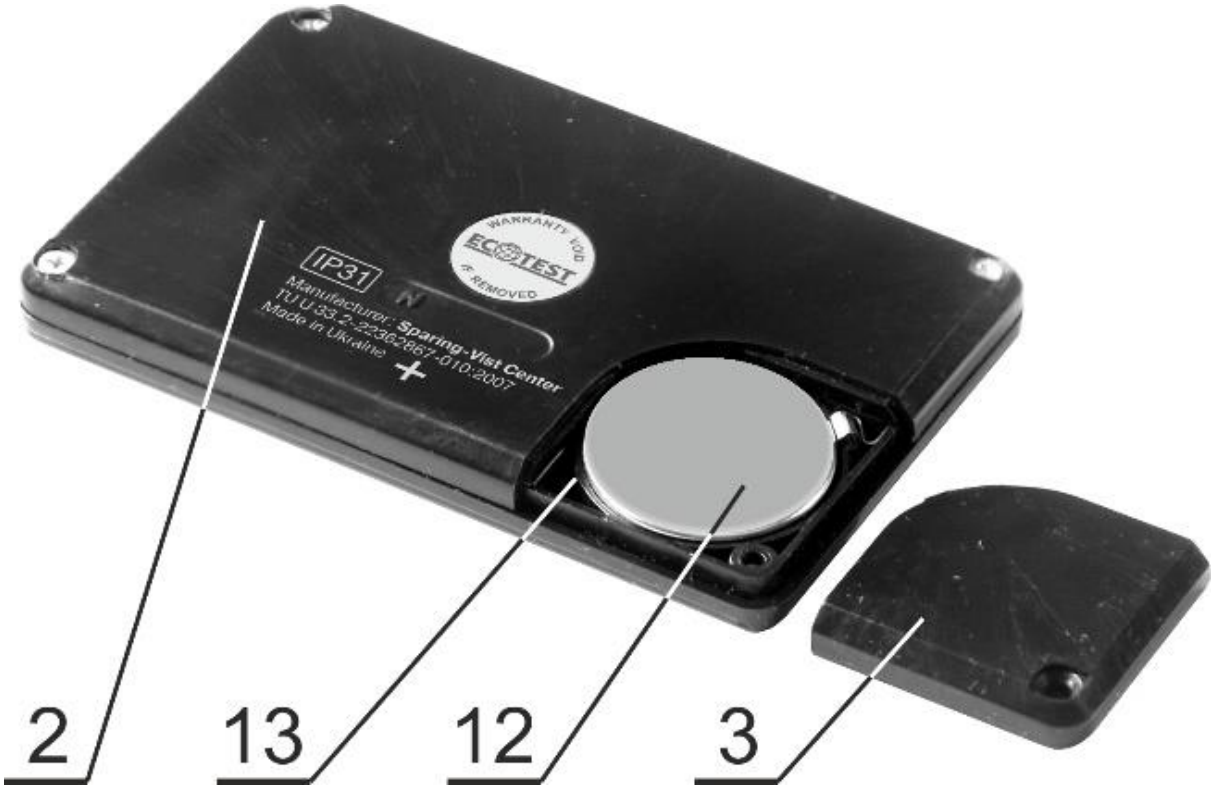

Figure B.2 - Rear view of the dosimeter

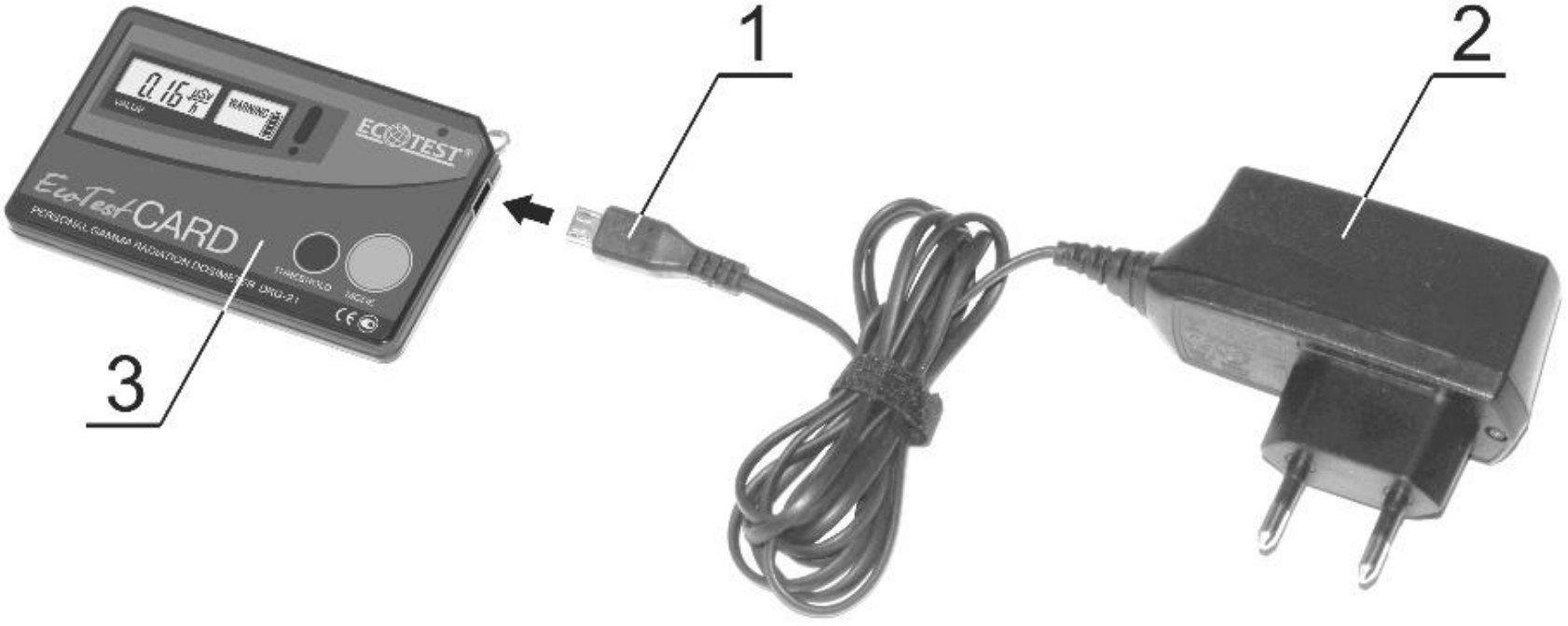

Figure B.3 – Connecting the charger

APPENDIX C

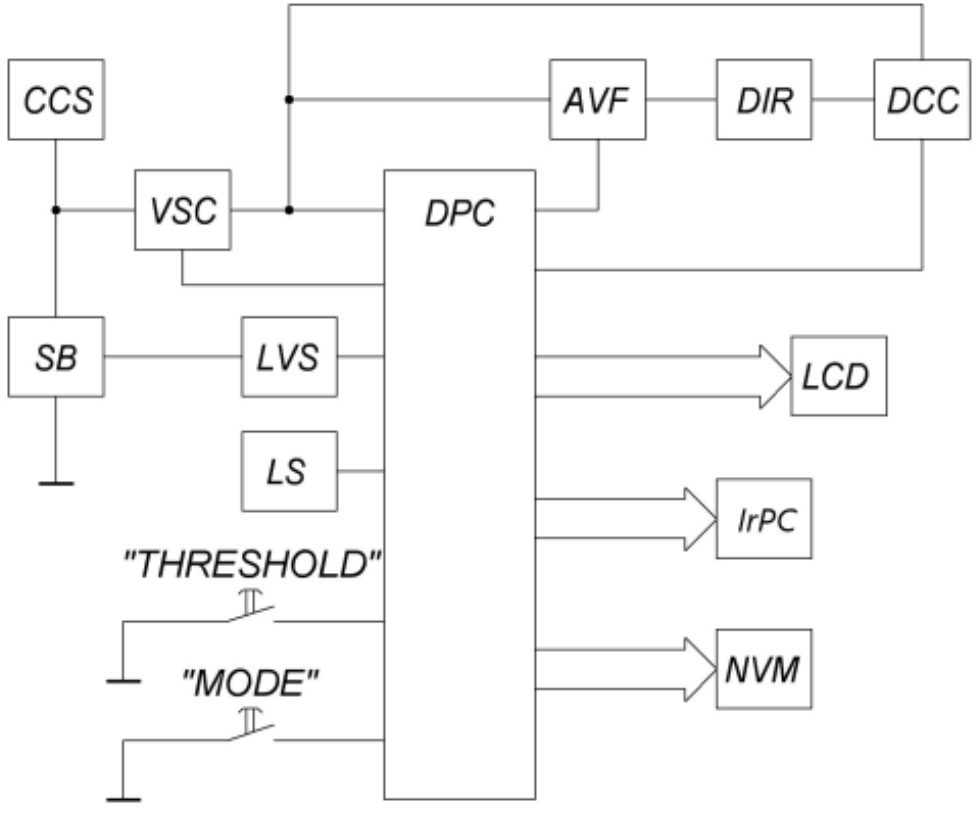

Figure C.1 - Block diagram of the dosimeter

APPENDIX D

PUTTING IN PROLONGED STORAGE AND REMOVAL FROM STORAGE

Date of putting in prolonged storage	Method	Date of removal from storage	Name of the enterprise in charge of putting the unit in prolonged storage or removing from storage	Date, position, and signature of the responsible official

APPENDIX E

STORAGE

Date		Storage conditions	Position, name and signature of the responsible official
of placing in storage	of removing from storage		

APPENDIX F

TROUBLE RECORD DURING USE

Date and time of trouble. Operating mode	Type (external manifesta-tion) of trouble	Cause of trouble, number of operation hours of the failed element	Action taken and claim note	Position, name and signature of the person responsible for solving the problem	Note

APPENDIX G

VERIFICATION OF KEY SPECIFICATIONS

Verified specification		Date of measurement			
		year 20		year 20	
Name	Value according to specifica-tion	Actual value	Measured by (position, signature)	Actual value	Measured by (position, signature)
1 Main relative error limit of the dosimeter of DER measurement with confidence probability of 0.95, % in the DER range: - from 1.0 μSv/h to 10 μSv/h - from 10 μSv/h to 1.0 Sv/h	20 % 15 %				

APPENDIX G

G-1

Date of measurement					
year 20		year 20		year 20	
Actual value	Measured by (position, signature)	Actual value	Measured by (position, signature)	Actual value	Measured by (position, signature)

APPENDIX G

VERIFICATION OF KEY SPECIFICATIONS

Verified specification		Date of measurement			
Name	Value according to specification	year 20		year 20	
		Actual value	Measured by (position, signature)	Actual value	Measured by (position, signature)
2 Main relative error limit of the dosimeter of DE measurement in the DER range from 1.0 μSv/h to 1 Sv/h with confidence probability of 0.95 in the DE range: - from 0.01 to 9999 mSv	15 %				

APPENDIX G

G-2

Date of measurement					
year 20		year 20		year 20	
Actual value	Measured by (position, signature)	Actual value	Measured by (position, signature)	Actual value	Measured by (position, signature)

APPENDIX H

REPAIR

Name and symbol of the component part	Reason for repair	Date		Name of the repair body
		of admission to repair	of withdra-wal from repair	

APPENDIX H

REPAIR

Number of hours worked before repair	Type of repair (middle-life, major)	Name of repair work	Position, name and signature of the responsible official	
			who performed repair	accepted after repair

APPENDIX J

VERIFICATION AND INSPECTION RESULTS

Date	Verification or inspection type	Verification or inspection result	Position, name and signature of the inspector	Note

LIST OF ABBREVIAITONS

ASPIC	- automated system of individual dosimetry control
IRPA	- infrared port adapter
SB	- storage battery
LS	- loudspeaker
DIR	- detector of ionizing radiation
DE	- individual dose equivalent
NVM	- nonvolatile memory
LVS	- linear voltage stabilizer
OM	- operating manual
DER	- individual dose equivalent rate

SW	- software
PC	- personal computer
IrPC	- infrared port circuit
CCS	- charging control circuit
VSC	- voltage stabilization circuit
DCC	- detector control circuit
DPCC	- digital processing and control circuit
AVF	- anode voltage former
dLCD	- digital liquid crystal display